burks®
www.cranepumps.com

## *Turbines - Base Mounted*

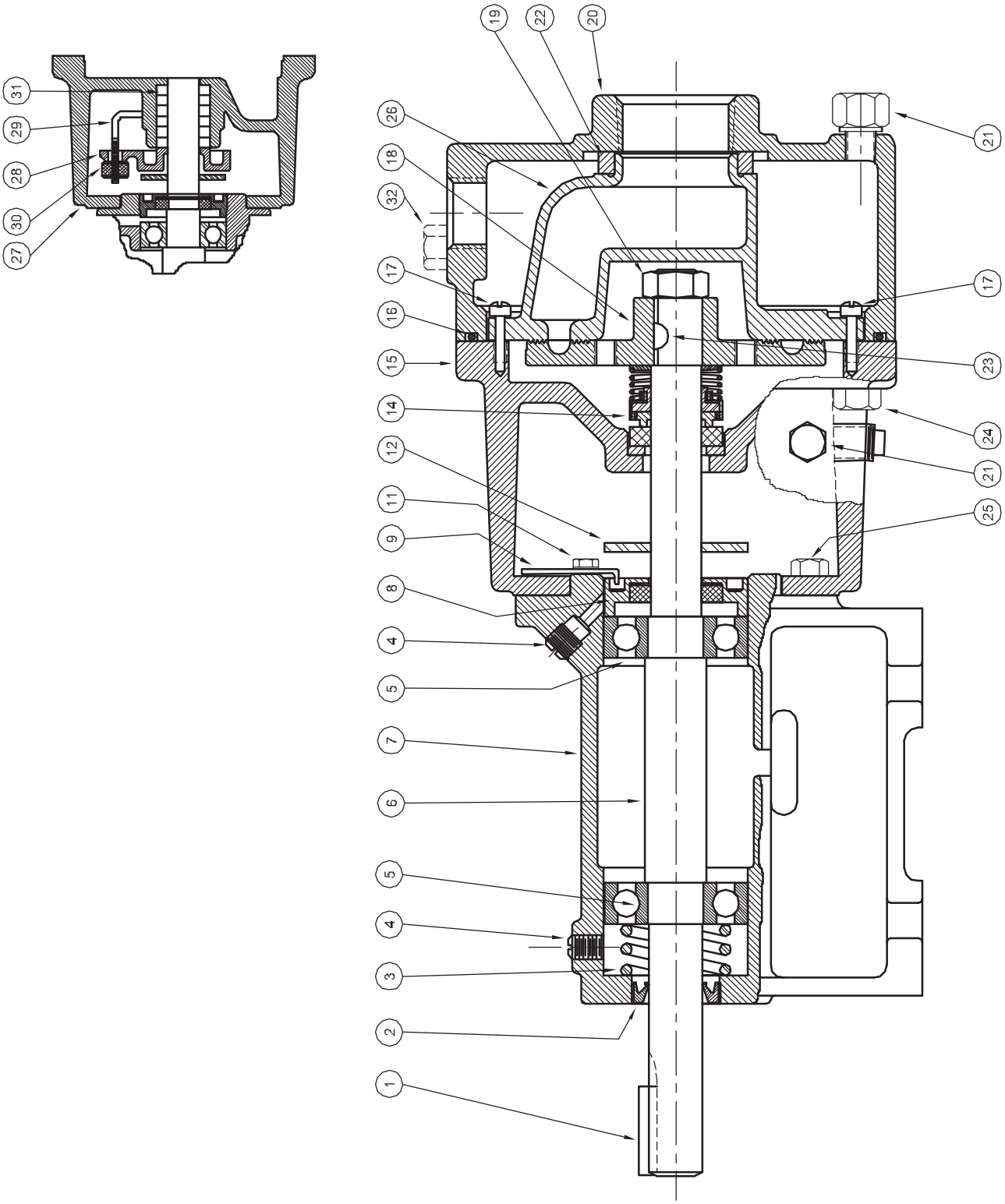




CRANE®
A Crane Co. Company

PUMPS & SYSTEMS

USA: (937) 778-8947 • Canada: (905) 457-6223 • International: (937) 615-3598

| SYMBOL NUMBER | PART NUMBER | QTY | DESCRIPTION |
|---|---|---|---|
| 1 | 01420 | 1 | Key |
| 2 | 20939 | 1 | Oil Seal |
| 3 | 20922 | 1 | Spring |
| 4 | 01691 | 2 | Plug, 1/8" |
| 5 | 21463 | 2 | Bearing |
| 6 | 20921 | 1 | Shaft |
| 7 | 20920 | 1 | Bearing Housing |
| 8 | 09781 | 1 | Impeller Adjusting Screw |
| 9 | 07576 | 1 | Lock, Adjusting Screw |
| 11 | 07577 | 1 | Screw - #10-24 x 3/8" Lg |
| 12 | 08324 | | Slinger Washer |
| | 08991 | 1 | Mechanical Seal - Buna-N (Std) |
| 14 | 09813-C | 1 | Mechanical Seal - Viton |
| | 21934 | 1 | Mechanical Seal - EPT |
| 15 | 09787 | 1 | Frame (for mechanical seal) |
| 16 | 09791 | 1 | O-Ring Gasket - Buna-N (Std) |
| | 09817 | 1 | O-Ring Gasket - Viton |
| | 22135 | 1 | O-Ring Gasket - EPT |
| | 22104 | 1 | O-Ring Gasket - Teflon |
| 17 | 02535 | 2 | Screw, Raceway to Frame |
| | SA09788-5 | 1 | Impeller - ES5M |
| | SA09788-6 | 1 | Impeller - ES6M |
| * 18 | SA09788-7 | 1 | Impeller - ES7M |
| | SA09788-HT-8 | 1 | Impeller - ES8M |
| | SA09788-HT-9 | 1 | Impeller - ES9M |
| 19 | 01404 | 1 | Impeller Locknut |
| 20 | 09790-B | 1 | Case |
| 21 | 04236 | 3 | Pipe Plug - 1/4" |
| 22 | 04231 | 1 | Suction Sleeve - Buna-N (Std) |
| | 09695 | 1 | Suction Sleeve - Viton |
| | 20285 | 1 | Suction Sleeve - EPT |

| SYMBOL NUMBER | PART NUMBER | QTY | DESCRIPTION |
|---|---|---|---|
| 23 | 01457 | 1 | Key, Woodruff (as shown) (repair kit only) |
| | 21748-A | 1 | Key, Square |
| 24 | 01931 | 4 | Cap Screw, 7/16-14 x 1¼" Lg |
| 25 | 03121 | 4 | Cap Screw, 1/4-20 x 3/4" Lg |
| | 09789-5 | 1 | Raceway - ES5M |
| | 09789-6 | 1 | Raceway - ES6M |
| 26 | 09789-7 | 1 | Raceway - ES7M |
| | 09789-8 | 1 | Raceway - ES8M |
| | 09789-9 | 1 | Raceway - ES9M |
| 27 | 09792 | 1 | Frame (for stuffing box) |
| 28 | 05812-B | 1 | Gland, Stuffing Box |
| 29 | 07003 | 2 | Gland Bolt |
| 30 | 04211 | 2 | Gland Nut |
| 31 | 05468 | 5 | Packing |
| 32 | 02953 | 1 | Pipe Plug - 1/2" |
| | 21348 | 1 | Power Frame Assy (Includes symbols 1 thru 8 and 12) |
| **DIFFERING PARTS FOR ALL BRONZE CONSTRUCTION** | | | |
| 15 | 09787-A | 1 | Frame (for mechanical seal) |
| 27 | 09792-A | 1 | Frame (for packing gland) |
| 20 | 09790-C | 1 | Case |
| 25 | 03121-A | 4 | Cap Screw |
| 24 | 08771 | 4 | Cap Screw - SS |

(*) Standard impellers are suitable for fluid temperatures to 250°F (121°C). For higher temperatures, add the designation "HT" to impeller part number.
This includes all "MJ" Jacketed Seal Pumps. EXAMPLE: SA09788-HT-5

**NOTE 1:** Impeller and raceway must be ordered as a repair kit.
NOT available individually..

**REPAIR KITS FOR ES SERIES PUMPS**

| REPAIR KIT PN (Std Buna-N) | MODEL | REPAIR KIT PN (Viton) | MODEL | REPAIR KIT PN (EPT) | MODEL | REPAIR KIT PN (High Temp) | MODEL | REPAIR KIT PN (High Temp with Cooling Jacket) | MODEL |
|---|---|---|---|---|---|---|---|---|---|
| 20522-5 | ES5M | 20522-5-MV | ES5MV | 20522-5-ME | ES5ME | 20522-HT-5 | ES5MV-HT | 20522-5-MJ | ES5MJ |
| 20522-6 | ES6M | 20522-6-MV | ES6MV | 20522-6-ME | ES6ME | 20522-HT-6 | ES6MV-HT | 20522-6-MJ | ES6MJ |
| 20522-7 | ES7M | 20522-7-MV | ES7MV | 20522-7-ME | ES7ME | 20522-HT-7 | ES7MV-HT | 20522-7-MJ | ES7MJ |
| 20522-8 | ES8M | 20522-8-MV | ES8MV | 20522-8-ME | ES8ME | 20522-HT-8 | ES8MV-HT | 20522-8-MJ | ES8MJ |
| 20522-9 | ES9M | 20522-9-MV | ES9MV | 20522-9-ME | ES9ME | 20522-HT-9 | ES9MV-HT | 20522-9-MJ | ES9MJ |

**KIT INCLUDES:** Impeller, Raceway and Screws, Shaft Seal, Suction Sleeve, Impeller Locknut and Key, and Instructions.

**WARNING:**
CANCER AND REPRODUCTIVE HARM -
WWW.P65WARNINGS.CA.GOV